XJ007-A01

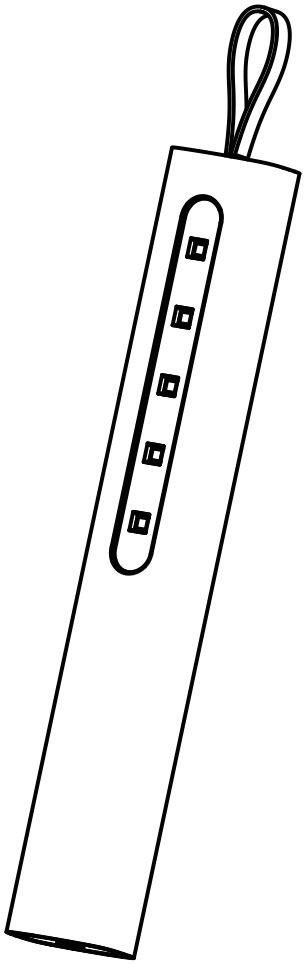

01
02
03
05
06
08

4.

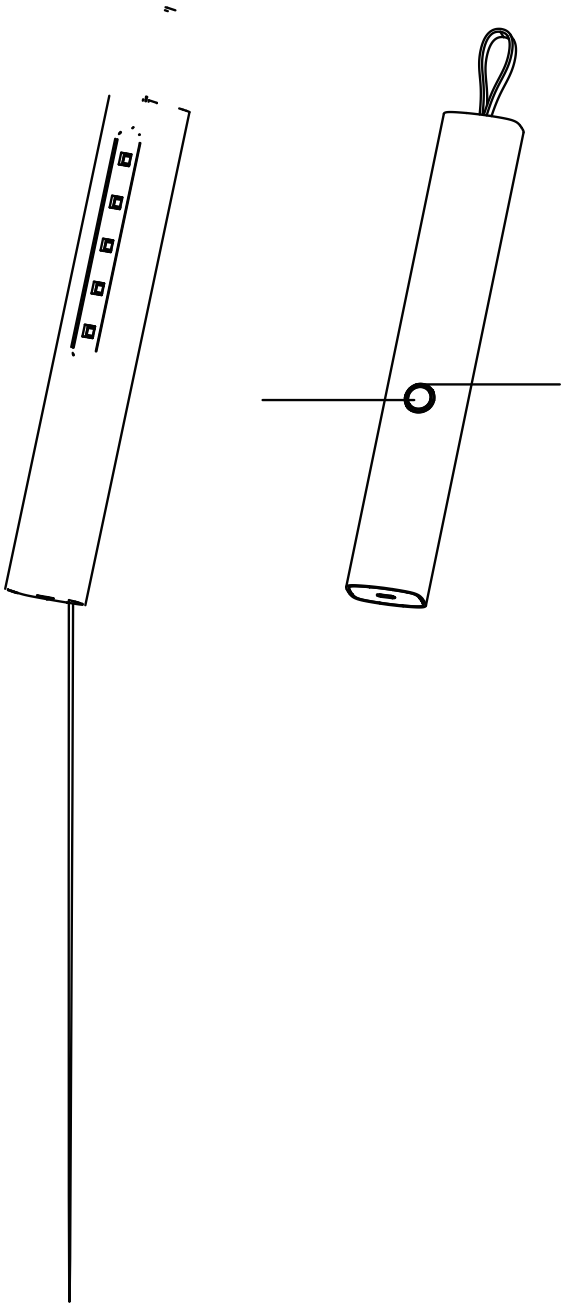

2.

LED
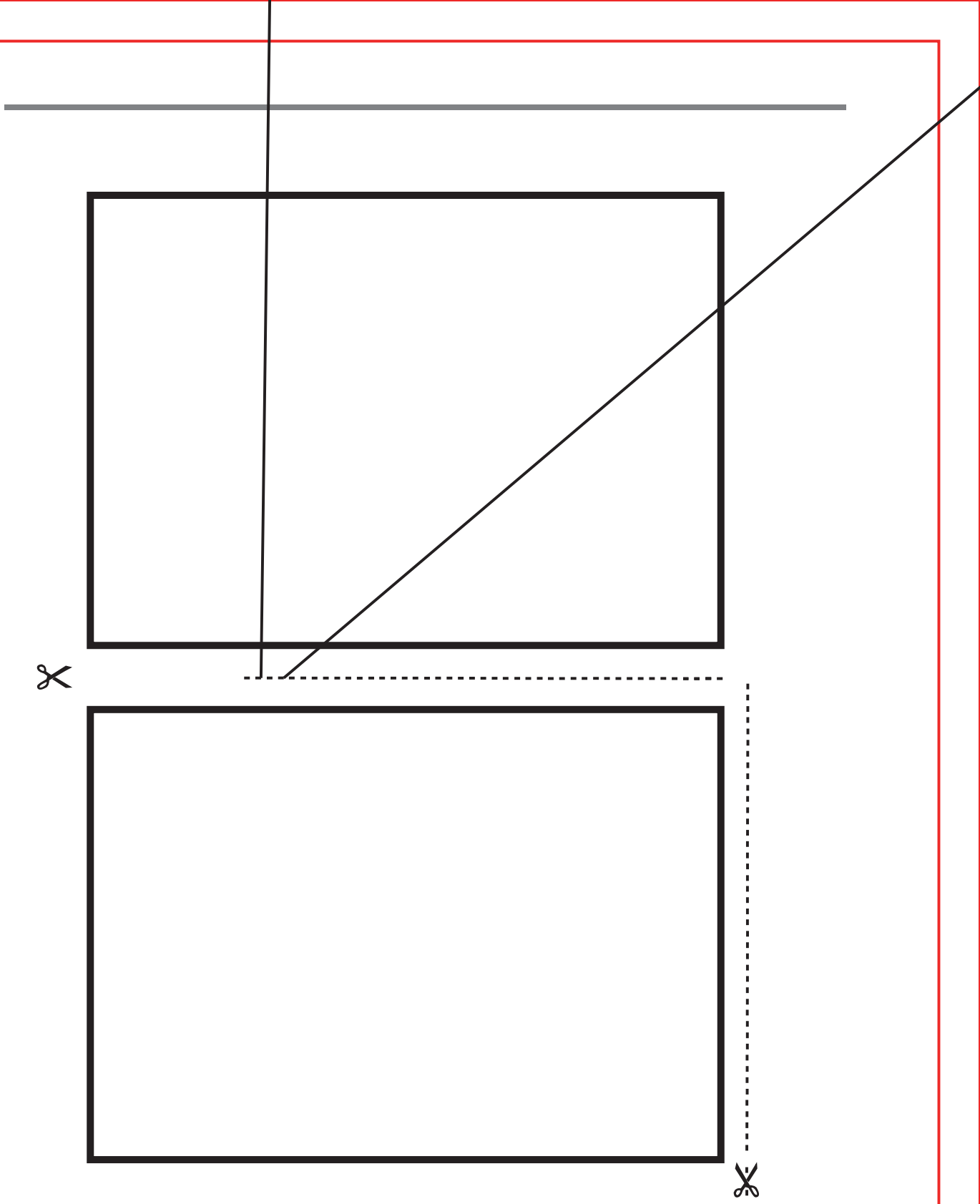
1		
2		
3